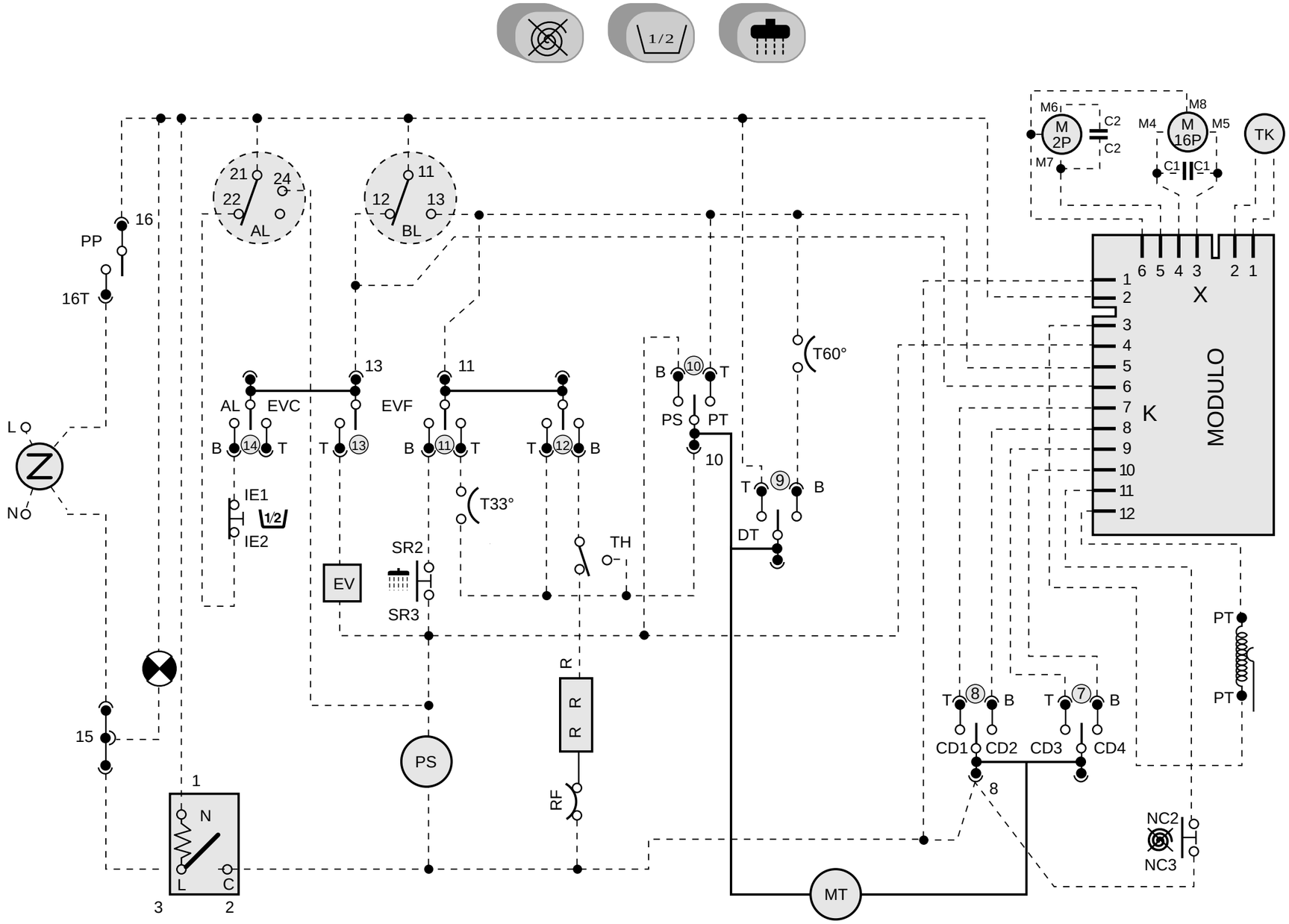

TM	Motorino timer	Timer motor	WV	Elettrovalvola	Water valve
EM	Termostop	Thermostop	CC	Condensatore centrifuga	Spin capacitor
IF	Filtro antidisturbo	Interference filter	CL	Condensatore lavaggio	Wash capacitor
RSS	Stop acqua in vasca	Spin delay button	HE	Resistenza lavaggio	Heating element
SDE	Esclusione centrifuga	No spin button	RE	Relè	Relay
LWS	Mezzo carico	Half load button	AS	Pulsante On - Off	ON - OFF button
e	Energy saving	Eco button	ER	Pulsante 4° Risciacquo	Extra rinse button
CWS	Lavaggio a freddo	Cold wash button	TH(10°-90°C)	Termostato regolabile	Adjustable thermostat
PRL	Pressostato liv.basso	Low level pressostat	TH	Termostato fisso	Klixon
PRH	Pressostato liv.alto	High level pressostat	M	Motore	Main motor
WVC	Elettrovalvola fredda	Water valve (cold fill)	SM	Motore centrifuga	Spin-dry motor
WVW	Elettrovalvola calda	Water valve (hot fill)	WM	Motore lavaggio	Wash motor
PREH	Pressostato	Pressostat	CU	Modulo elettronico	Control unit
DSS	Bloccoporta	Micro delay switch	Z	Temporizzatore	Drying timer
DPM	Elettropompa	Drain pump motor	GPL1	Lampada spia	Pilot lamp
SL	Super lavaggio	Extra Washing Button	GPL2	Lampada oblò	Door pilot lamp
EC	Energy saving				

MS: SALT MICRO SWITCH
MB: RINSE AID MICRO SWITCH
EVD: DETERGENT MAGN. VALVE
EVB: RINSE AID MAGN. VALVE
EVR: RESIN MAGN. VALVE
EVA: WATER MAGN. VALVE
PL: WASH MOTOR
PS: DRAIN PUMP
R: HEATING ELEMENT
TR: THERMISTOR
MP: DOOR MICRO-SWITCH
FL= FLUSSOMETER
P= PRESSURE SWITCH
Z: RFI FILTER
C: CAPACITOR

Denominazione
CABL 3P 3M ABS 0692-0 TER
POT AF T40 220V 50HZ 1V

Disegnato	Controllato	Data
F.Fava		15-01-99
Scala	N° C.T. 0000	mm

Codice: 460599355

Derivato 510064700
Assieme 511041900
Note
Disegno: D0000000
Progetto: 0000

A termine di legge ci riserviamo la proprieta' di questo con divieto di uso e riproduzione

N° Mod. | N° C.T. | Data | Controllato | Disegnato | Posizione | Modifiche

Timer Description	220-240V 50-60Hz
Code Number	516008200
Type	TIMER 0662-0

11	WASHING CODE 4	7	B
	WASHING CODE 3		T
8	WASHING CODE 2	8	B
	WASHING CODE 1		T
7	60°	9	B
	TIMER DIRECT		T
6	DRAINING PUMP	10	B
	FULL TIMER		T
4	OPZ. EXTRA RINSE - DRAINING	11	B
	30°		T
5	HEATING	12	B
	STOP WITH WATER IN THE TUB		T
3		13	B
	COLD WATER VALVE		T
2	HIGH LEVEL WITH PUSH BUTTON	14	B
	HOT WATER VALVE		T
1		16	B
	TIMER DIRECT		T

TIMER POSITION	DURATION	R.P.M.	TO SUBSEQUENT POSITION AFTER :	FUNCTIONS OF THE MACHINE
1	4'/2'	45	T+4'/2'	FILLING FINE WASHING + HEATING
2	4'	45	4'	NORMAL WASHING
3	2'	100	2'	NORMAL WASHING DRAINING
4	2'	45	P+ 2'	FILLING NORMAL WASHING
5	4'	45	T1+ 4'	NORMAL WASHING + HEATING
6	4'	45	P+ 4'	NORMAL WASHING + HEATING 90 / 60
7	4'	45	P+ 5'	NORMAL WASHING
8	4'	45	T1+ 4'	FINE WASHING + HEATING 60
9	4'	45	P+ 4'	NORMAL WASHING
10	2'	45	T+ 4'	NORMAL WASHING + HEATING 40
11	2'	100	P+ 2'	COOL DOWN + NORMAL WASHING
12	2'	2'		NORMAL WASHING DRAINING
13	2'	55	P+ 2'	FILLING NORMAL WASHING
14	2'	55	P+ 2'	NORMAL WASHING
15	2'	55	2'	NORMAL WASHING DRAINING
16	2'	55	P+ 2'	NORMAL WASHING
17	2'	55	P+ 2'	NORMAL WASHING
18	2'	100	2'	NORMAL WASHING DRAINING
19	2'	1000	2'	DRAINING + INTERMEDIATE SPINNING
20	2'	55	P+ 2'	NORMAL WASHING
21	2'	55	P+ 2'	NORMAL WASHING
22	2'	55	P+ 2'	NORMAL WASHING
23	2'	100	2'	NORMAL WASHING DRAINING
24	2'	1000	2'	DRAINING + INTERMEDIATE SPINNING
25	2'	55	P+ 2'	FILLING NORMAL WASHING
26	2'	55	P+ 2'	NORMAL WASHING
27	2'	100	2'	NORMAL WASHING DRAINING
28	2'	500	2'	DRAINING + LOW SPINNING
29	2'	1000	2'	DRAINING + HIGH SPINNING
30	2'	1200	2'	DRAINING + HIGH SPINNING
31	STOP			STOP
32	2'	45	T+ 2'	FILLING FINE WASHING + HEATING 35°
33	2'	45	T+ 2'	FINE WASHING + HEATING
34	2'	100	2'	NORMAL WASHING DRAINING
35	4'/2'	45	T+ 4/2'	FILLING FINE WASHING + HEATING 60°
36	4'	45	T+ 4'	FINE WASHING + HEATING
37	4'	45	P+ 4'	FINE WASHING + HEATING 50
38	4'	45	P+4'	FINE WASHING + HEATING 40°
39	2'	100	2'	NORMAL WASHING DRAINING
40	2'	55	P+ 2'	FILLING FINE WASHING
41	2'	100	2'	NORMAL WASHING DRAINING
42	2'	55	P+ 2'	FINE WASHING
43	2'	100	2'	NORMAL WASHING DRAINING
44	2'	55	P+ 2'	FILLING FINE WASHING
45	2'		2'	STOP WITH WATER IN THE TUB
46	2'	100	2'	NORMAL WASHING DRAINING
47	2'	500	2'	DRAINING + LOW SPINNING
48	STOP			STOP
49	2'	25	T+ 2'	FILLING WOOL FINE WASHING + HEATING 35°
50	2'	25	P+ 2'	WOOL FINE WASHING
51	2'		2'	DRAINING
52	2'	55	P+ 2'	FINE WASHING
53	2'		2'	DRAINING
54	2'	55	P+ 2'	FINE WASHING
55	2'		2'	DRAINING
56	2'	55	P+ 2'	FINE WASHING
57	2'		2'	STOP WITH WATER IN THE TUB
58	2'	100	2'	NORMAL WASHING DRAINING
59	2'	500	2'	DRAINING + LOW SPINNING
60	STOP			STOP

FAST CAMS	1	2	3	4	5	6	7	8	9	10	11	12	13	14	15	16	17	18	19	20	21	22	23	24	25	26	27	28	29	30	31	32	33	34	35	36	37	38	39	40	41	42	43	44	45	46	47	48	49	50	51	52	53	54	55	56	57	58	59	60
FIRST TIME - NORMAL WASHING 4'	■	■			■	■	■	■	■	■																					■				■	■	■	■										■												■
SECOND TIME - FINE WASH 2'			■	■							■	■	■	■	■	■	■	■	■	■	■	■	■	■	■	■	■	■	■	■		■	■	■					■	■	■	■	■	■	■	■			■	■	■	■	■	■	■	■	■	■	■	■	

KEY	
AAL	Very High Level
AL	High Level
B/A	Low Level / High Level
BL	Low Level
D	Fine Washing
DD	Very delicate Washing
N	Normal Washing
P	Time to Reach Water Level
T	Time to Reach Temperature
TA	Drying Time
LSS	Low Speed Spin
HSS	High Speed Spin

N° Mod. | N° C.T. | Data | Controllato | Disegnato | Posizione | Modifiche

Denominazione	Disegnato: Fava	Controllato	Data: 13-01-99
LINEAGRAM TIM 0662-0 220-240V 50-60HZ CF 1V	Scala	N° C.T.: 4184	mm
	Codice: 460601900		

Derivato: 000000000

Assieme: 000000000

Note

Disegno: D0672800

Progetto: 0000

A termine di legge ci riserviamo la proprieta' di questo con divieto di uso e riproduzione